RAVENSBURY ESTATE

Outline Planning Application
By
Clarion Housing Group Ltd

DESIGN CODE

November 2017

CLARION
HOUSING GROUP

RAVENSBURY MASTERPLAN
DESIGN CODE

Report by: HTA Design LLP

Client: **Clarion Housing Group**
Masterplanners: **HTA Design LLP**
Landscape Architects: **HTA Design LLP**
Sustainability Consultants: **HTA Design LLP**
Employer's Agent: **MACE Group**
Planning Consultants: **Savills**

—

Ravensbury Estate, Merton

—

Outline Masterplan Design Code

—

CAG-REM_HTA-A_00_ RP_0010

—

18.01.2017
REV-L

hta

CLARION
HOUSING GROUP

HTA Design LLP
78 Chamber Street
London E1 8BL
-
020 7485 8555
info@hta.co.uk
www.hta.co.uk
-

Report by: HTA Design LLP
Status: OUTLINE PLANNING FOR APPROVAL - REV-L

Document ref/rev: CAG-REM_00_RP_0010_Design Code
First Issued: 04.11.2016
This Issue Date: 18.01.2018

Author: ECH
Checked by: CD

Ravensbury Estate: Outline Masterplan Application
Design Code

CONTENTS

01

INTRO-DUCTION

BUILDING UP A VISION FOR CHANGE

"The Design Code is a set of illustrated design rules and requirements which instruct and may advise on the physical development of a site area. The graphic and written components of the code are detailed and precise and build upon a design vision such a masterplan or a design and development framework for a site or area"

CLG, "Preparing Design Codes: a practice manual", RIBA publishing, 2006)

Merton Priory Homes (also known as Circle Housing Merton Priory) was formed in 2010 as a result of the transfer of stock from the LBM and at that time became a subsidiary within the Circle Housing Group. At the point of this application Merton Priory Homes are 'The Landowner' and own/manage around 9,500 homes across the borough including Eastfields, High Path and Ravensbury. Historically, the consultations and information provided were undertaken by Circle Housing Merton Priory.

In November 2016 the Circle Housing Group (the parent company of Merton Priory Homes) merged with the Affinity Sutton Group to form a new parent company Clarion Housing Group Ltd (this is a charitable housing association). Clarion Housing Group refers to all of the companies that form the largest housing group in the country with over 125,000 homes. Circle Housing Merton Priory remains as one of a number of charitable housing associations that form part of Clarion Housing Group. Moving forward, it is intended that later this year the Merton Priory Homes subsidiary will merge into another member of the Clarion Housing Group, Circle Thirty Three Housing Trust.

This application is being submitted by Clarion Housing Group Ltd, which is referred to in all reports and supporting documents as 'The Applicant'.

A DISTINCT TOOL TO REGULATE DEVELOPMENT

1.1 Purpose of the Document

This document establishes a set of rules and standards to guide the development of the Ravensbury estate.

The aim is to provide the specifications for regulating the built form and the public realm, build upon the overall vision and set the framework of the general regeneration principles.

Common principles across the Merton Regeneration sites are incorporated, whilst specific parameters are included to reflect the different scale and character of Ravensbury.

This Design Code have been prepared to assist the delivery of quality urban form by:

+ Ensuring that development is responsive to place, through codes that are locally specific and respond to local conditions and patterns of development.
+ Delivering a higher quality of development in accordance with national policy.
+ Providing flexibility of delivery.
+ Providing developers with a greater certainty, through clear statements on what is acceptable development and what is not.
+ Providing planning officers with a tool to allow them to quickly determine acceptability of proposals.
+ Allowing development to take place on a large scale within a short time period, through codes that promote and set out clear parameters for an ordered urban fabric.

Built form and relationships between buildings are fixed in the submitted planning application. However, the Design Code sets out key principles and design parameters that inform and control the design for future reference. This will inform Reserved Matters applications and detailed design of future phases.

Whilst a certain degree of flexibility is maintained for future detailed design, the Design Code provides design guidance to ensure that the masterplan principles described in the Design Statement are achieved.

The Outline Planning Application seeks permission with some matters reserved. Whilst the application documents provide details of an illustrative masterplan (as visualised on Drawing No CAG-REM_00_DR_0101 Rev A which is submitted for information), these are provided for illustrative purposes only to provide an indication of one way in which the masterplan could be delivered to comply with the relevant planning policy having regard to the principles set out in the application. Illustrative details on issues such as materials, building types and landscaping included within the Design Code and Design and Access Statement are also only demonstrating potential design options available for the development. As such, these illustrative details are not for approval. Similarly the technical strategies provided, for example in relation to drainage and energy, provide outline strategies which will need to be developed further as the scheme proposals are developed at Reserved Matters stage. In this context, it is anticipated that Planning Conditions / Obligations will be attached to the permission where necessary. The Applicant commits to working closely with LBM to agree these in due course as part of the application process.

Furthermore, the Council is at an advanced stage of preparing the Estates Local Plan, which provides a planning policy framework for the regeneration of this estate. The draft Plan was examined in public hearings in July 2017 and following this Main Modifications have been published for consultation. It is anticipated that the draft Plan wll be adopted by the Council in early 2018.

The Estates Local Plan has been a key influence on the preparation of this Design Code and Section 1.5 outlines the principal policies. Where LB Merton policy is actively promoted within this Design Code, the yellow '**policy stamp**' will appear.

1.2 Structure of this Document

This document is structured into five main chapters;

+ Overarching Design Principles
+ The Masterplan
+ Character Areas
+ Housing Typologies
+ Glossary of Terms

02

OVERARCHING DESIGN CODE PRINCIPLES

Describes general design principles to the buildings and landscape. This includes a chapter on building parameters, providing information on sizes and standards to be adhered to. This section also provides guidance regarding the treatment of the buildings envelope, including elements such as entrances, corner blocks, flank walls/gable end, building breaks, balconies and terraces. Within the landscape chapter, it includes guidance on private and communal amenity spaces.

03

RAVENSBURY MASTERPLAN

Provides a summary of the masterplan objectives and principles. It identifies the key elements of the design intent that are required to be achieved in order to meet the community's, stakeholders and clients aspirations.

04

CHARACTER AREAS

Identifies the different street and spaces characters that make High Path and establishes design principles, providing guidance to the street scene, including street frontages/ elevations and landscape design. Within this chapter, each street character is described consistently under the following three sub-components;

a.) **Character**
The overarching goal of the design of each street/place

b.) **Built Form**
How the building design supports the creation of that character

c.) **Public Realm**
How the landscape design supports the creation of that character

05

HOUSING TYPOLOGIES

Establishes design principles to the proposed residential building typologies of the Masterplan.

06

GLOSSARY OF TERMS

1.3 Instructions for Use

This document supports the outline planning application for Ravensbury Estate and should be read in conjunction with all other documents submitted with the Planning Application. The Design Statement in particular makes reference to this Design Code.

Built form and relationships between buildings are fixed in the submitted planning application. However, the Design Code sets out key principles and design parameters that inform and control the design for future reference. This will inform Reserved Matters applications and detailed design of future phases.

Whilst a certain degree of flexibility is maintained for future detailed design, the Design Code provides design guidance to ensure that the masterplan principles described in the Design Statement are achieved.

All the elements described in this code are strongly encouraged to be followed, as they will aid the development to achieve a coherent urban form.

Cross references are made between the principles throughout the document to facilitate the readers.

"It is intended that this document provides a consistent overarching 'narrative', ensuring that all design elements work in harmony towards a common goal, while also providing a sufficiently flexible 'framework', ensuring that all design elements can respond creatively."

1.4 - Ravensbury and the LB Merton Draft Estates Local Plan

As stated at the outset of this document, the design of the Ravensbury Estate scheme has been designed to meet the design led, qualitative policies and standards held within the LB Merton Draft Estates Local Plan. The following section makes apparent these policies, and can be used as a reference when assessing the Ravensbury Estate proposals against them.

XXX n

NOTE:
Where LB Merton policy is actively promoted within this Design Code, the yellow 'policy stamp' will appear

Overarching Policies

OEP 1

Vision: OEP 1
"The creation of sustainable, well designed safe neighbourhoods with good quality new homes, that maintain and enhance a healthy local community, improve living standards and create safe environments."
(ELP p.28)

OEP 3

Urban Design Principles: OEP 3
"The design, layout and appearance of new development must take inspiration and ideas from the positive elements of the local built, natural and historic context." To do this, specific principles have been established around these areas of urban design, which you will see applied in the Ravensbury Project
(ELP p.38)

- *Perimeter blocks*
- *Active frontages*
- *Building lines*
- *Open space*
- *Defensible space*
- *Promoting biodiversity*
- *Promoting active design*
- *Promoting sustainable development*
- *Permeable, legible and accessible layouts*
- *Density*
- *Parking provision*
- *Local context*

DPD Ch.4

DPD - Chapter 4 - Building design

"Set out the approach intended to guide architectural style and the design of building elevations...allows different phases of development to have their own character... to prevent a monotonous urban form and character. ...this could be in the form of a more formal design code. this should include palette of common characteristics in basic architectural features, such as materials, height and proportions, yet allows scope for individual creativity for each building and phase.

This should also contain specific guidance on the appearance of elevations, notably to ensure they contain sufficient three-dimensional depth, human scale detail, visual interest and that sufficient attention to detail is given to the design of windows, their materials, proportions and depth of reveals.
(ELP p.176)

Site Specific Policies

EPR 1

Townscape: EPR 1
"Creation of high quality and responsive townscapes that relates positively to the local context. Enhancement and protection of the built environment including the townscape and landscape and provision of new buildings and spaces that are well designed and an enhanced local character. Conservation and enhancement of heritage assets and their settings."
(ELP p.185)

EPR 2

Street Network: EPR 2
"Provision of a network of recognisable traditional streets that link well with each other, the wider neighbourhood and allow for other future developments to link seamlessly with them. Reduction in road congestion by improving travel choices, promoting public transport, walking and cycling, and reducing the need to travel by private vehicle. Enhancement and protection of the built environment including the townscape and landscape and provision of new buildings and spaces that are well designed and an enhanced local character."
(ELP p.185)

EPR 3

Movement and Access: EPR 3
"To achieve efficient and convenient movement of people and goods by all modes, that aims to reduce the need to travel, promotes sustainable transport, and aims to address and potentially resolve existing movement and access issues. Reduction in road congestion by improving travel choices, promoting public transport, walking and cycling, and reducing the need to travel by private vehicle.
A reduction in the risk of air pollution to human health and in the environment."
(ELP p.187)

EPR 4

Land use: EPR 4
"To achieve predominantly residential development, with appropriate policy compliant supporting land uses; and at a density that makes efficient use of land whilst creating high quality, locally relevant design. To ensure development optimises the use of land to benefit residents, businesses, other occupiers and the surrounding area. Enhancement and protection of the built environment including the townscape and landscape and provision of new buildings and spaces that are well designed and an enhanced local character."
(ELP p.189)

EPR 5

Open Space: EPR 5
"To achieve adequate and appropriate provision of open space in terms of number and location of spaces, and its design quality and usability. To protect and enhance biodiversity. Enhancement and protection of the built environment including the townscape and landscape and provision of new buildings and spaces that are well designed and an enhanced local character. Maintenance and improvement in soil and land quality"
(ELP p.191)

EPR 6

Environmental Protection: EPR 6
"To ensure issues of flooding, biodiversity and climate change are adequately addressed and fully integrated into the designs for all proposals. To protect and enhance biodiversity. To address the causes of climate change through reducing greenhouse gas emissions and adapting to the long-term effects of climate change. To reduce water pollution and improve water quality and resources in the river Wandle and Beverly Brook. To reduce water consumption and ensure water saving measures and adequate water and wastewater infrastructure supports new development. To improve amenity by minimising the *impact associated with noise. To reduce the flood risk to people and property from all sources of flooding including surface water flooding. A reduction in the risk of air pollution to human health and in the environment. Provision of specific measures in the development, to improve energy and reduce greenhouse gas emissions. Application of the Waste Hierarchy to minimise waste by re-use, recycling and increasing energy derived from residual waste"*
(ELP p.193)

EPR 7

Landscape: EPR 7

"To achieve a coherent and integrated approach to providing and improving landscaping, including trees and vegetation, that supports open space, biodiversity, flooding and climate change policy aims. To protect and enhance biodiversity. Enhancement and protection of the built environment including the townscape and landscape and provision of new buildings and spaces that are well designed and an enhanced local character."
(ELP p.195)

EPR 8

Building Heights: EPR 8

"To achieve building heights that are appropriate to a range of factors, including efficient use of land, density guidance and good relationship to surrounding context. Enhancement and protection of the built environment including the townscape and landscape and provision of new buildings and spaces that are well designed and an enhanced local character."
(ELP p.195)

1.5 Design Principles

OEP 1 OEP 3

This section outlines the set of key design principles all developments are expected to adhere to, in line with draft ELP Policy OEP3.

These design principles identified, summarise the commitment to invest in people and their communities, and the homes and neighbourhoods where they live. All proposals should comply with the following principles in order to achieve the highest standards of design, accessibility and inclusive design.

We have identified three design-focused themes, which stand out for us as over-riding principles:

+ Adding Value
+ Customer Satisfaction
+ Place Making

Additional to that, the design principles refer to the spaces and environments surrounding the homes and aim to achieve the following:

+ Provide high quality, safe and secure homes
+ Design developments that respect and respond to existing context and which strengthen neighbourhood identity
+ Provide, where possible, a mix of uses and forms in order to create stimulating, enjoyable and convenient places thriving with vitality and street life that can support local employment
+ Helping to create a mixed neighbourhood with facilities that are complementary to the existing provision and are viable.
+ Propose direct, attractive connections to existing routes and facilities that will integrate better the development to its wider neighbourhood.
+ Enhance existing and create new green links between the development and the wider environment to increase biodiversity value
+ Utilizing the inherent qualities of the areas we develop, including local distinctiveness, history and heritage.
+ Create places of townscape and landscape importance.
+ Optimise the scale and density of their development, considering the local context, to maximising sales income from efficient use of sites
+ Create homes that are high quality

"Ensure that agreed design intentions are not lost in translation, but are recorded and efficiently transmitted into good quality urban development"

02

OVERARCHING DESIGN CODE PRINCIPLES

LAND USE AND AMOUNT

2.0 Introduction OEP 3

This section has been amended to reflect the scale and context of Ravensbury. The content differs slightly from the approach of the other Merton regeneration sites.

The following pages (chapter 2) include codes and overarching principles that are common for all three Merton regeneration sites. These codes aim to guide all development, embed good urban design principles and ensure that proposals meet national, regional and local policy standards, with a particular regard to draft ELP Policy OEP3 across all principles.

Simple diagrams accompany text and illustrate 'good' and 'bad' examples of development elements.

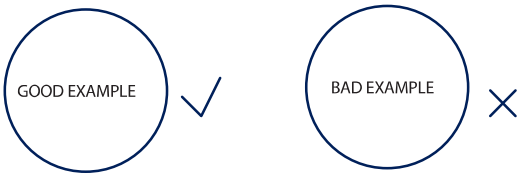

"It is intended that this document provides a consistent and overarching 'narrative', ensuring that all design elements work towards a common goal, while it provides a flexible 'framework', to allow for creative approaches."

2.1 Land Use EPR 4

2.1.1 Land uses within each site shall be in accordance with their respective Parameter Plans.

2.1.2 Land uses within the development are to create focal points and activity zones in the most suitable locations.

2.1.3 The development should enable the creation of a neighbourhood and should be integrated with the surrounding context.

2.1.4 Primary land uses are to be in accordance with those of the surrounding area.

2.2 Amount OEP 3 EPR 8

2.2.1 The amount of residential development within each site will be controlled by the proposed residential unit numbers of each site.

2.2.2 Site massing to contribute to legibility and placemaking within the development.

2.2.3 The development proposals are to demonstrate careful consideration of the proposed building heights in relation to the creation of new distinct character areas or existing context.

2.2.4 In each development site consideration should be given to maximising the potential of dual aspect units.

LAYOUT

2.3 Building Lines

Frontages

2.3.1 Ground floor building frontages shall align parallel to the street.

2.3.2 Continuity in the building frontages will enclose spaces and create continuous pedestrian routes. Breaks in the built frontage are to be minimised.

2.3.3 Breaks between buildings are to be optimised, identifying changes in scale and street character, and offering visual definition to the interaction between the street and internal courtyards.

2.3.4 Where the building changes in height, there should be a vertical division. Vertical division should be expressed within the building fabric.

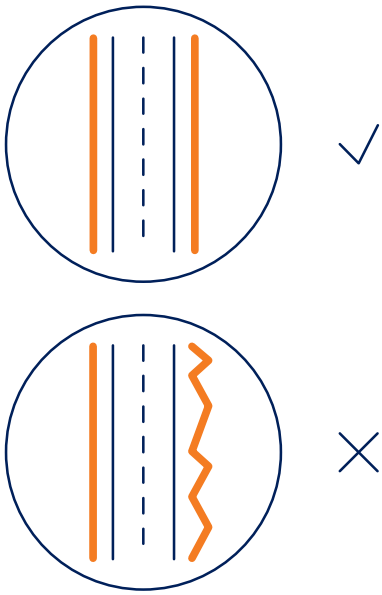

Privacy zone and separation

2.3.5 All dwellings with ground floor habitable rooms and front doors are to be accessed directly from primary and secondary streets where levels allow. Carefully detailed privacy zones of 1 to 3 metres measured from the back of pavement to the building line, will offer a comfortable connection to the street.

2.3.6 Privacy zones are not required on building faces with no front doors onto secondary or primary streets.

2.3.7 Privacy zones shall not lie outside the development block boundary.

2.3.8 The established building line shall be either the edge of the privacy zone or, where there is no privacy zone, the building line can deviate by 1 to 3 meters from the development block towards the interior of the Parcel.

2.3.9 The established building line, the depth of the privacy zone, where applicable, and the building frontage shall each remain consistent along the street.

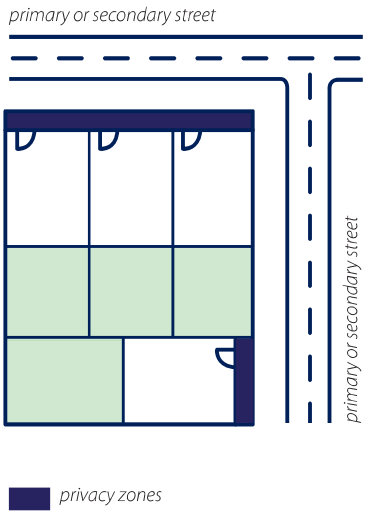

2.4 Building Envelope

Principle Frontages

2.4.1 A principle frontage is an elevation of key importance within each development.

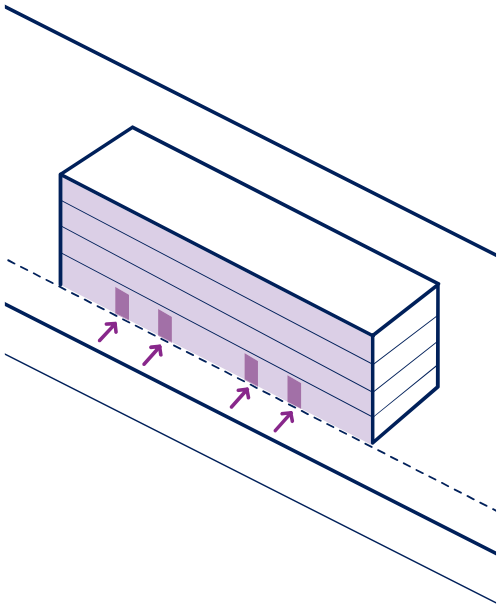

Principal Frontages should:

+ Contribute positively to the character of the public spaces they define.
+ Maximise active frontages.
+ Include clearly highlighted building entrances, balconies and windows.
+ Use high quality materials and finishes, adopting a limited palette of materials, and developing a consistent approach to the design of the façades. Facade detailing should maintain a coherent rhythm.
+ Feel robust and grounded.
+ Consist of active ground floor frontages in the case of non-residential ground floor uses.
+ Minimise the use of service vents and avoid blank, undifferentiated, untreated walls at the ground floor level.

Principal frontages should not:

+ Include car parking entrance
+ Include servicing access doors

2.5 Street Proportions EPR 2

Hierarchy

2.5.1 Every development shall incorporate a clear hierarchy of streets. This hierarchy is to be defined by the character and function of each street rather than on the streets vehicular capacity, in line with draft ELP Policy EPR2.

2.5.2 In each development the strategy for the street hierarchy is to incorporate the location of principal frontages.

Function

2.5.3 Streets are to be designed as multi-functional spaces serving not only the circulation of pedestrians, cyclists and vehicles but also providing spaces for play and social interaction.

Character

2.5.4 The character of each street is to be defined by its role within the public realm, as well as the types of buildings and landscapes which line it.

2.5.5 The character of each street is to contribute to the overall character of each development.

2.5.6 Streetscape design should focus on creating a sense of enclosure. The width of new streets should be proportionate to the heights of buildings and their location.

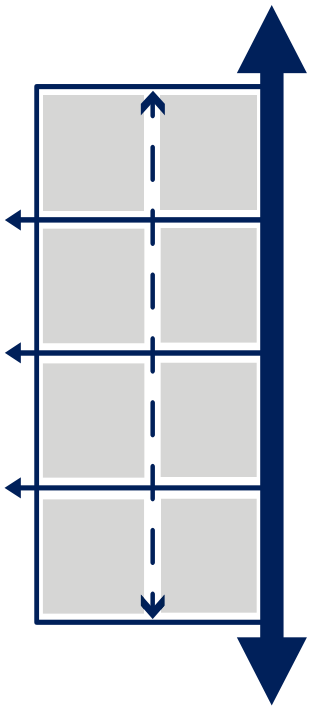

2.6 Car Parking

Off- street car parking

2.6.1 Individual houses may include on plot parking

2.6.2 Parking courts should be carefully designed, so as to be overlooked, with direct access to/from the surrounding dwellings, and offer adequate lighting.

On- street car parking

2.6.3 By using careful and innovative design, streets can be made to incorporate a certain level of unallocated on-street parking in the form of parallel or perpendicular parking bays or parking squares.

2.6.4 Car parking spaces shall be located on a level surface.

2.6.5 Car parking bays width shall be:

Parallel parking bays 2.0m minimum
Perpendicular spaces 2.4m minimum

2.6.6 Landscaping is important and should be incorporated into parking areas but in some circumstances landscaping can reduce the available bay size for vehicles meaning a reduced availability of parking spaces.

2.6.7 Car parking bays and tree planting integration shall be considered in relation to the individual streetscape character as set out in the Landscape and Public Realm section of this document (chapter 4).

2.6.8 The location and design of car parking spaces are to encourage maximum use.

2.6.9 Disabled parking bays that comply with the minimum disability standards will be provided.

2.6.10 Parking provision for people with disabilities are to be considered. Inclusive design principles should be considered to meet the changing mobility requirements of residents.

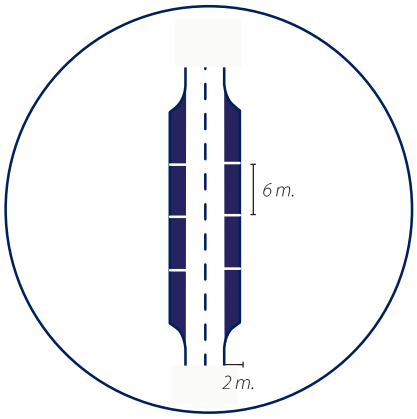

Parallel parking arrangement

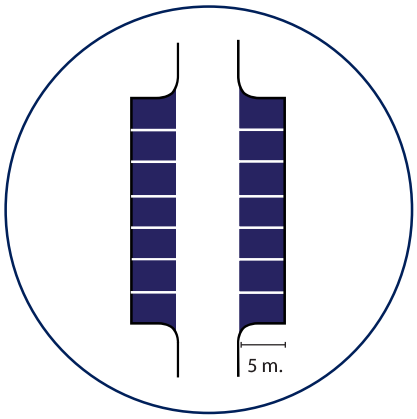

Perpendicular parking arrangement

LANDSCAPE & PUBLIC REALM

2.7 Movement, accessibility and wayfinding

EPR 3

2.7.1 Access to the site is to be obvious and easy for all users, in line with Draft ELP Policy EPR3.

2.7.2 Sites are to be designed to achieve minimum conflict between users arriving on foot, by bicycle or by vehicle.

2.7.3 Developments are to respect the urban grain and existing movement network in order to avoid restrictions to public accessibility.

Pedestrian footpaths and access

2.7.4 Safe and suitably surfaced routes shall be provided throughout the site offering adequate lighting.

2.7.5 Surfaces for pedestrian use are to be smooth and even, as well as suitable for wheelchair users.

2.7.6 Appropriate barriers (raised planters, shrub massing, bollards, or moveable fences) are to be provided to keep vehicles out of pedestrian and landscape areas.

2.7.7 Walkways should be hard-surfaced and raised above the surface of the parking area.

2.7.8 Primary pedestrian routes are to be emphasised through wider walkways and enhanced landscape treatments.

2.7.9 Pedestrian crossings are to be provided at major vehicle intersections. Raised surfaces are encouraged.

2.7.10 Walkways will connect amenity spaces.

2.7.11 Commercial uses are encouraged to provide a mix of paving materials to be located near the main building entrances, defining the priority for pedestrian access.

Vehicular movement

2.7.12 Sites are to be designed to promote safe vehicle movement and traffic calming.

2.7.13 Good visibility is required in all types of vehicular roads, minor roads and shared surfaces.

2.8 Streetscape character

2.8.1 A variety of streetscape characters with clear street hierarchy will be provided to express diversity and enhance the surrounding urban context.

2.8.2 Streetscapes are to have a unique character and enhance the quality and characteristics of the site.

2.8.3 New streetscapes are to include landscaping schemes that maintain local distinctiveness and character and promote biodiversity.

2.8.4 Opportunities to provide vistas, focal points and landmarks shall be taken advantage of, providing legibility and a sense of identity.

2.8.5 An innovative variety of a unique streetscape characters shall achieve a practical balance between long-term environmental health and the demands of modern day living.

2.8.6 Deliver pedestrian-only zones at points of primary pedestrian connections.

2.8.7 Surface finishes and colours are to be used to define routes, crossings and pedestrian-only zones.

2.8.8 Street furniture is to be used to define safe zones/routes.

2.8.9 The relationship of landscape furnishings to buildings, walkways, paths, and courtyard areas is important in defining the character.

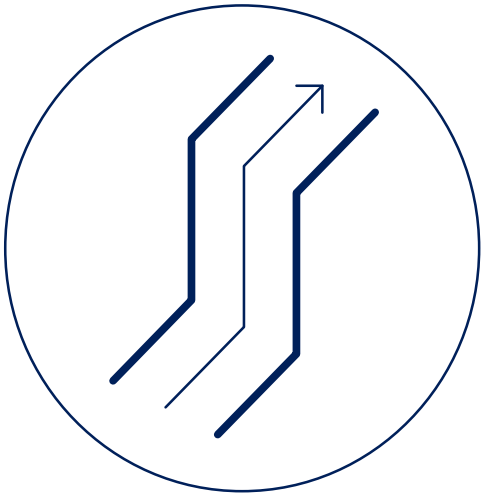

2.9 Private and communal amenity space

EPR 5 EPR 6

Gardens and defensible spaces

2.9.1 Development should aim to use landscaping to create a clear distinction between public and private spaces.

2.9.2 Private and usable outdoor garden space is to be provided in residential developments.

2.9.3 Outdoor garden space, for informal recreation and enjoyment, is to be of a size and dimension to suit the requirements of the building's occupants.

2.9.4 Outdoor amenity space for homes are to be directly accessible from the house to allow for secure and private outdoor use and children's play.

2.9.5 The orientation of outdoor garden space shall aim to retain natural features of the site, where possible; maximising natural light, offering neighbours and future occupants a reasonable level of privacy.

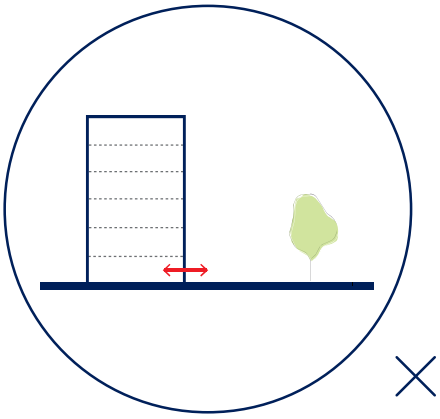

Courtyards and rear gardens

2.9.6 Communal amenity space should be provided in accordance with the London Plan Housing SPG.

2.9.7 The communal gardens shall allow for tree/ large shrub planting.

2.9.8 Rear façades to retain a high quality of design.

2.9.9 All elevations facing into courtyards are to work harmoniously as a single element.

2.9.10 The use of light coloured materials are to be considered to maximise sun light reflection.

2.9.11 Balconies and windows from the upper apartments need to be carefully positioned to avoid overlooking into private gardens/patios at ground level.

2.9.12 Materials on courtyard elevations do not necessarily need to accord to materials used on street elevations.

2.9.13 Each courtyard may have a distinctive sense of identity.

2.9.14 Special regard is to be paid to gable-end elevations and how the transition from street to courtyard is handled and expressed.

2.9.15 Orientation is to be carefully considered in order to prevent overshadowing and maximise natural daylight.

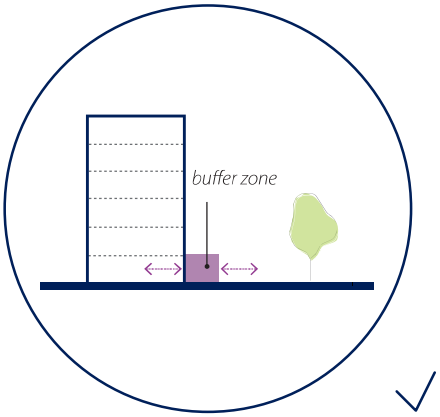

2.10 Public open spaces EPR 5

Design

2.10.1 Create transitional zones between public and private spaces through different layers of landscaping.

2.10.2 Public spaces to face active frontages and be well overlooked.

2.10.3 Provide a variety of activities taking into account the needs of different users.

2.10.4 Landscaping is to help the visitor orientate through a space.

Planting

2.10.5 The choice of tree species and planting shall reflect the road hierarchy whilst encouraging and attracting biodiversity. Mature landscaping should be considered where possible.

2.10.6 Vibrant and attractive planting shall be introduced to create playful and interesting landscape character.

Security

2.10.7 Crime prevention principles are to be strongly adopted, including defensible space, natural surveillance, visibility, street lighting and other security measures.

2.10.8 Development is to avoid the creation of dark, hidden and badly overlooked corners, routes or spaces.

Lighting

2.10.9 Public space shall be well lit in order to aid security and natural surveillance, whilst considering local ecology and private habitable rooms.

Street furniture and art

2.10.10 Areas of public space and greenery are to include provision of adequate street furniture and public art.

5.4.11 Street furniture shall be carefully considered to offer attractive, functional and of long lasting designs.

2.10.12 Public art is to have local significance, creating landmarks of attraction which are well related to the buildings or space surrounding them.

2.10.13 Public art shall sit in a location that does not cause safety concerns or attract antisocial behaviour.

2.11 Play spaces EPR 6

Design

2.11.1 All play areas are to be considered and designed in accordance with the GLA play provision calculations.

2.11.2 Play areas must be designed and constructed in response to the needs of all users, this includes children, parents and carers.

Location

2.11.3 Play spaces are to be strategically located within the masterplan to minimize noise impact to dwellings.

2.11.4 A variety of spaces will be required, including those suitable for younger children located close to amenities and those suitable for a broader age range located further away. Off-site provision can be proposed.

Safety

2.11.5 Safety surfaces are intended to prevent serious accidents and head injuries and are only needed where there is movement or danger of falling.

Seating

2.11.6 Play areas are to include seating for children and young people, which could also double as play equipment.

2.11.7 Seating shall also be provided for adults inside the play environment rather than outside to encourage parents to engage in their children's play.

Activities

2.11.8 It is important to consider the sort of challenges and activities in which children may want to take part.

2.12 Sustainable landscape and public realm EPR 5 EPR 6 EPR 7

2.12.1 Streets are required to be designed to maximise the retention of existing vegetation and significant mature trees, to be preferably located within the development's amenity spaces.

2.12.2 Development is to consider the surrounding green infrastructure and wildlife habitats with a view to developing strategies that link up to existing wildlife corridors or create new ones.

2.12.3 The incorporation of green roofs, green walls and features that would improve biodiversity levels will be encouraged.

2.12.4 Paving materials and components should be permeable and be assessed according to their whole life costs and maintenance, where possible.

2.13 Building heights EPR 8

Built development is in accordance with the application drawings where scale is for approval.

2.14 Building articulation

Sunlight

2.14.1 Ensure adequate sunlight onto private and communal outdoor spaces.

2.14.2 Dual aspect is encouraged, allowing more light into the dwelling and permitting cross ventilation. Where dual aspect cannot be provided, due to problems of overlooking, it is to be demonstrated that the single aspect still permits adequate light and ventilation and that a high quality of design is still achieved.

2.14.3 All habitable rooms must have access to natural daylight.

2.14.4 Windows, especially those that are vertically oriented are to be spread out rather than concentrated to maximise access to daylight within dwellings.

2.14.5 New development shall not cause excessive overshadowing of existing amenity spaces or neighbouring properties and dwellings.

2.14.6 No new development is to result in the complete loss of sunlight to all parts of an existing adjoining property.

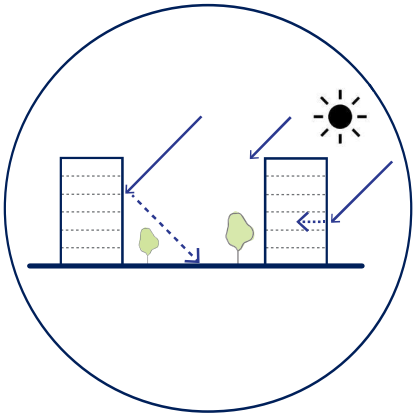

Privacy

2.14.47 Good design is necessary to addressing any potential privacy and overlooking issues by considering a range of design related factors, including but not restricted to:

+ the distance between properties and windows to habitable rooms;
+ the orientation of buildings and windows;
+ the size, design and positioning of windows and habitable rooms in the affected dwellings;
+ the incorporation of design measures such as the use of screens, obscure glass and fixed windows.

2.14.8 Ensure sizing and location of windows minimise overlooking between habitable rooms, private amenity areas, and other private areas.

2.14.9 Adoption of other effective, innovative design measures aimed at preserving privacy and minimising the overlooking of existing properties.